GUARDIAN/GUARDIANX SERIES DP21 NEMA 4/4X AIR CONDITIONER

Model	NEMA Rating	UL/CUL Listed or Recognized	BTU/H Capacity	95/95 Rating BTU/H	Ambient Temp. °F Max./Min	Ambient Temp. °C Max./Min	Volts	Hz	Running Amps	Approx. Weight lbs.	Approx. Weight kg.
KNA4C3DP21L	4	Listed	3000	2470	131/-20	55/-28	115/100	60/50	6.0/5.0	54	25
KNA4C3DP21LV	4X	Listed	3000	2470	131/-20	55/-28	115100	60/50	6.0/5.0	54	25

115V 60 Hz models perform at reduced capacity when operated at 100V 50 Hz.
Rating shown is for operation at maximum ambient temperature.

STANDARD FEATURES

Baked Powder Finish (NEMA 4 models)
Built-in Condensate Evaporator
CFC-Free Refrigerant
Closed-Loop Cooling
Compressor Short Cycle Protector
Condenser Blower Controller
Epoxy-Coated Condenser and Evaporator Coils
Filter
Heavy-duty Steel Shell (NEMA 4 models)
Internal Corrosion Protection (NEMA 4X models)
NEMA 12, 3R and 4 or 4X Ratings Maintained (UL50)
Programmable Temperature Alarm
Programmable Thermostat
Six-Foot [1.8m] (minimum) 3-Wire Power Cord
Stainless Steel Shell (NEMA 4X models)
UL/CUL Listed

ACCESSORIES AND OPTIONS

Adapter
Enclosure Heater
Filter Recoating Adhesive
Internal Corrosion Protection (NEMA 4 models)
Remote Monitoring
Remote Thermostat Relay
Replacement Filters
Special materials or finishes
Special motors, line cords or connectors

KOOLTRONIC, INC. REGISTERED FIRM ISO 9001:2015

c UL us

NEMA
TYPE 4/4X
MAINTAINED

Find additional information on this model at kooltronic.com, or use the Technical Documents QR code below.

Technical Documents

PERFORMANCE

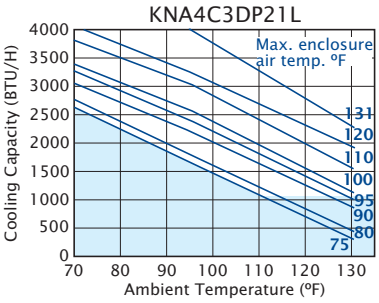

Operation within shaded area not recommended.

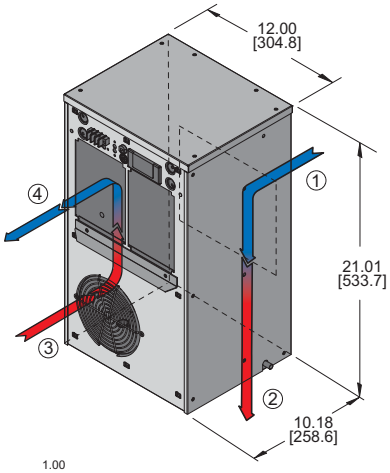

DRAWINGS

Dimensions, inches [mm], are for reference only and are subject to change.

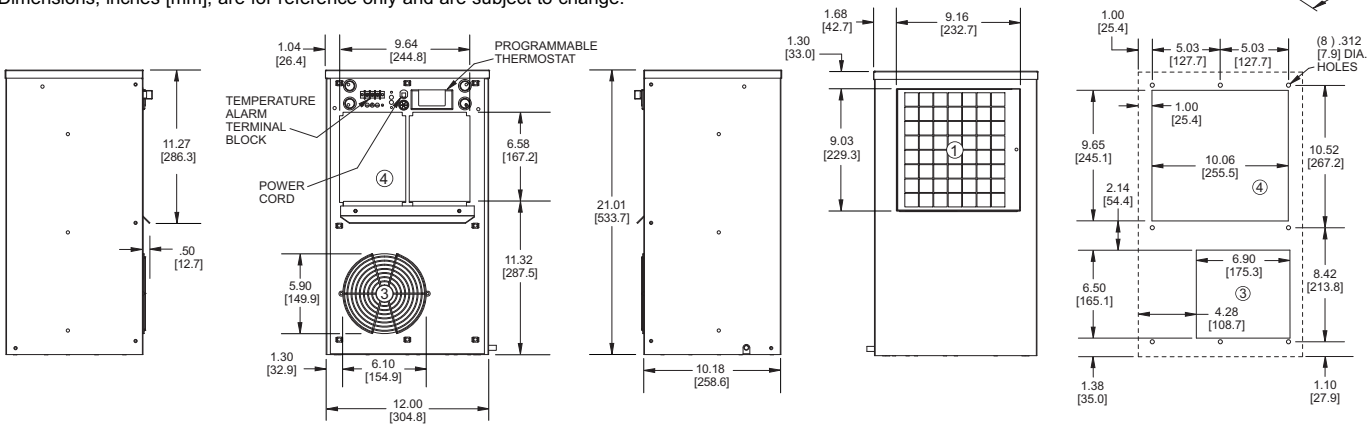

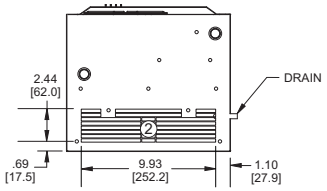

① CONDENSER AIR INLET (Ambient Air In)
② CONDENSER OUTLET (Warm Ambient Air Out)
③ WARM AIR RETURN FROM ENCLOSURE
④ COOL AIR OUTLET TO ENCLOSURE

Many popular units are available as 3D solid models for customer system integration. Please contact Kooltronic for details.

dpn21.qxd (10/27/21) (CDR: 20369)

Kooltronic, Inc., 30 Pennington-Hopewell Road, P.O. Box 240, Pennington, NJ 08534-0240
Tel: (609) 466-3400 Fax: (609) 466-1114 kooltronic.com sales@kooltronic.com

GUARDIAN/GUARDIANX SERIES DP21 NEMA 4/4X AIR CONDITIONER

DESCRIPTION

The ***Guardian/GuardianX*** Indoor/Outdoor Air Conditioners are designed specifically for **NEMA 4** and **4X** enclosure applications that require washdown or are subject to outdoor storm conditions. All ***Guardian*** models have a **NEMA 4** Rating, offering protection against the hazards of unwanted environmental penetration. The ***GuardianX***, with a ***NEMA 4X*** Rating, is available with a Stainless Steel Shell and Internal Corrosion Protection.

With Epoxy-coated condenser coils and a closed-loop cooling system, the ***Guardian Series*** offers added security by providing an operating environment safe from harsh ambient conditions.

The features engineered into all of the ***Guardian Series*** models make them a tamper-resistant choice for external applications. Combined with a NEMA 4 Rating, with all models UL/CUL Listed, the ***Guardian Series*** is an excellent choice for telecommunications or other outdoor cabinet applications.

FEATURES AND BENEFITS (STANDARD)

All models UL/CUL Listed, a standard of safety.

Built-in condensate evaporator eliminates the need for a drain (normal operation*).

CFC-free refrigerant provides a zero ozone depletion potential.

Closed-loop cooling provides stable temperature control while excluding dust and humidity from the electrical enclosure.

Compressor short-cycling protection extends compressor life.

Condenser impeller cycling provides stable capacity and temperature control.

Condenser filtration to maintain peak thermal performance extends compressor life.

Internal corrosion protection to increase reliability in hostile environments.

NEMA 12, 3R & 4 ratings for compatibililty with listed electrical enclosures.

Programmable thermostat capable of remote monitoring and control.

Programmable temperature alarm to alert if early action required.

Stainless steel shell for NEMA 4X corrosive environments (NEMA 4X models).

Both evaporator and condenser coils are epoxy coated, prolonging unit life.

* May not be adequate in extremely high humidity with open or leaky enclosure. Overflow condensate drain fitting and hose are included.

FEATURES AND BENEFITS (OPTIONAL)*

Enclosure heater eliminates damaging condensation, increasing reliability of electrical enclosure components.

Mounting adapter plates are offered to replace another manufacturer's unit.

Remote monitoring provides temperature data for warning of early action required.

Remote thermostat relay for control by a user-supplied control system.

Special paint finishes.

*Contact KOOLTRONIC for more information.

REPLACEMENT FILTERS

The DP21 filter Part No. 8388F (8.38″ x 8.88″ x 0.38″ [212.8mm x 225.5mm x 9.7mm])

Kooltronic, Inc., 30 Pennington-Hopewell Road, P.O. Box 240, Pennington, NJ 08534-0240
Tel: (609) 466-3400 Fax: (609) 466-1114 kooltronic.com sales@kooltronic.com